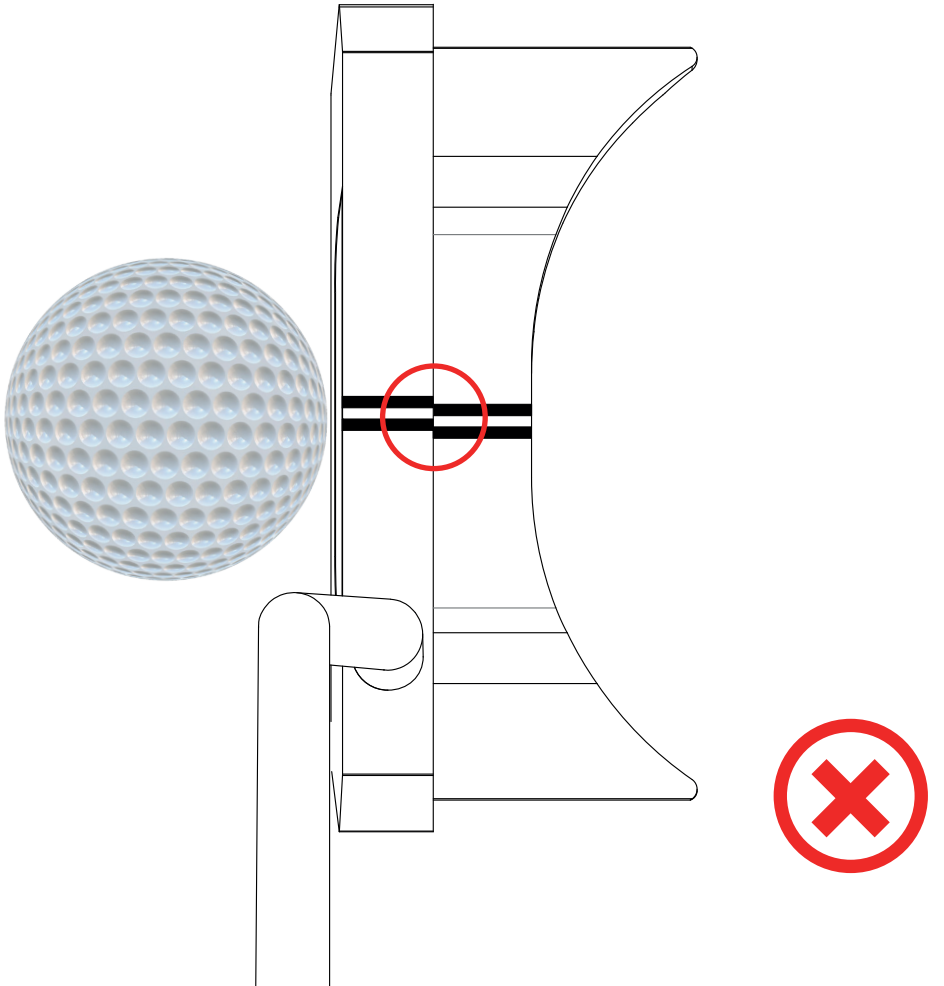
Misalignment

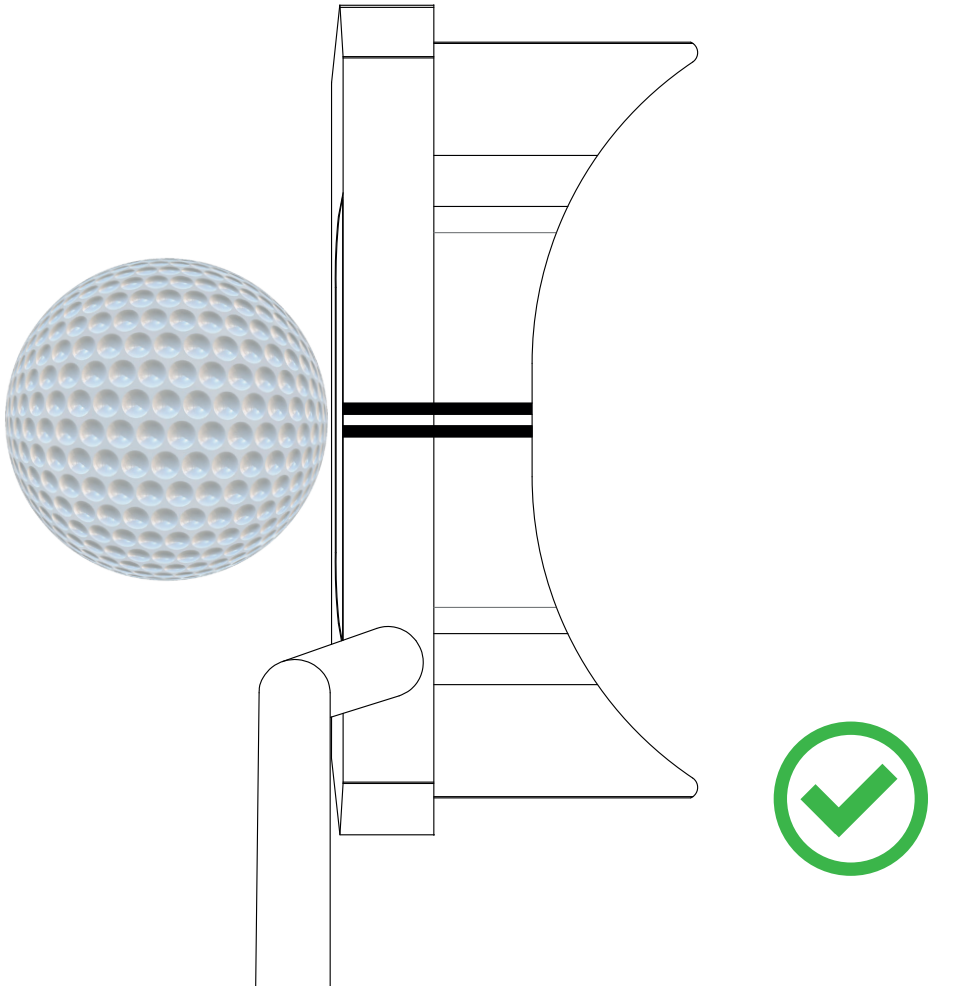
Alignment